HA VH BO GSH 27 VC (600 055)

Figure without obligation

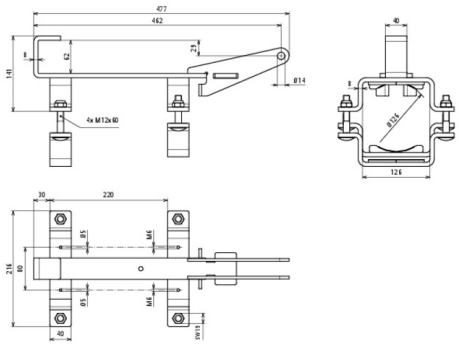

Type Part No.	HA VH BO GSH 27 VC 600 055
Types	GSH 27 VC
Material	St/tZn
Weight	5,36 kg
Customs tariff number (Comb. Nomenclature EU)	73269098
GTIN	4013364443433
PU	1 pc(s)

We reserve the right to introduce changes in performance, configuration and technology, dimensions, weights and materials in the course of technical progress. The figures are shown without obligation.