PCE data sheet

article#	**1822-10v**
article description	**CEE-wall mounted socket 16A 2p 24/42VDC IP66/IP67 TWIST**
description long	CEE-wall mounted socket 16A 2p 24/42VDC IP66/IP67 TWIST housing material: PA6 rated current: 16A number of poles: 2 (2P) clock-position: 10h rated voltage/frequency: 24/42V DC contacts: brass nickel plated connection technology: screw terminals IP protection class: IP66/IP67
GTIN (EAN)	9003399284366
country of origin	AT
customs number	85366990
net weight	0.244 kg
packaging quantitiy	5
minimum order quantitiy	10

ETIM 7.0	EC001321
IEC-amperage	16 A
Number of poles	2
Voltage acc. EN 60309-2	<50 V DC grey
Clock hour position	10 h
Identification colour	White
Degree of protection (IP)	IP67
Connection system	Schraubklemme
Cable entry	Verschraubung
Material	Plastic
Type of fastening	External mounting
Insulated mounting	True

a	143 mm
wire flexible	1-10 mm²
wire solid	1,5-10 mm²
contact screws	160 Ncm
dismantling length	70 mm
stripping length	14-16 mm

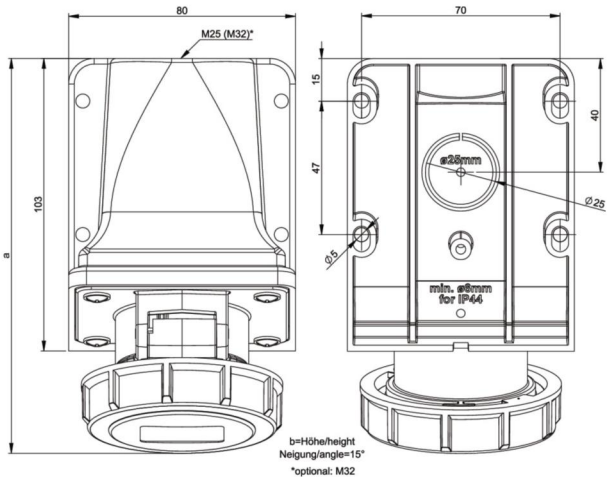

www.manufacturer-safety.info

9/21/2021

(C) PC ELECTRIC Ges.m.b.H. - Diesseits 145 - 4973 St. Martin i.l. - Austria - www.pcelectric.at